YODER SMOKERS
PREMIUM GRILLS & SMOKERS

ROLLING GRATE ACCESSORY
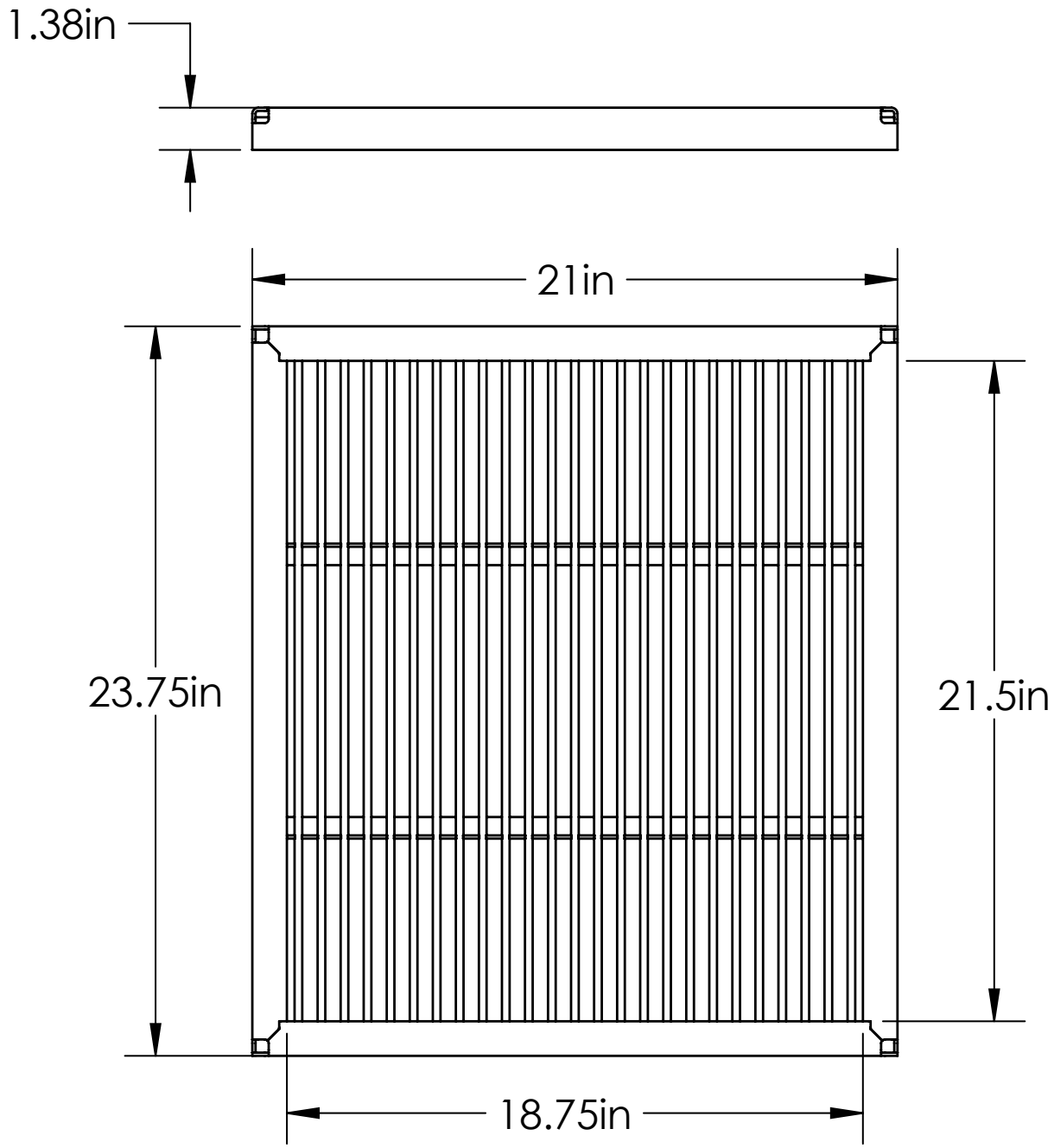
PRODUCT DIMENSIONS