YODER SMOKERS
PREMIUM GRILLS & SMOKERS

BRASERO ROTATING GRATE ACCESSORY
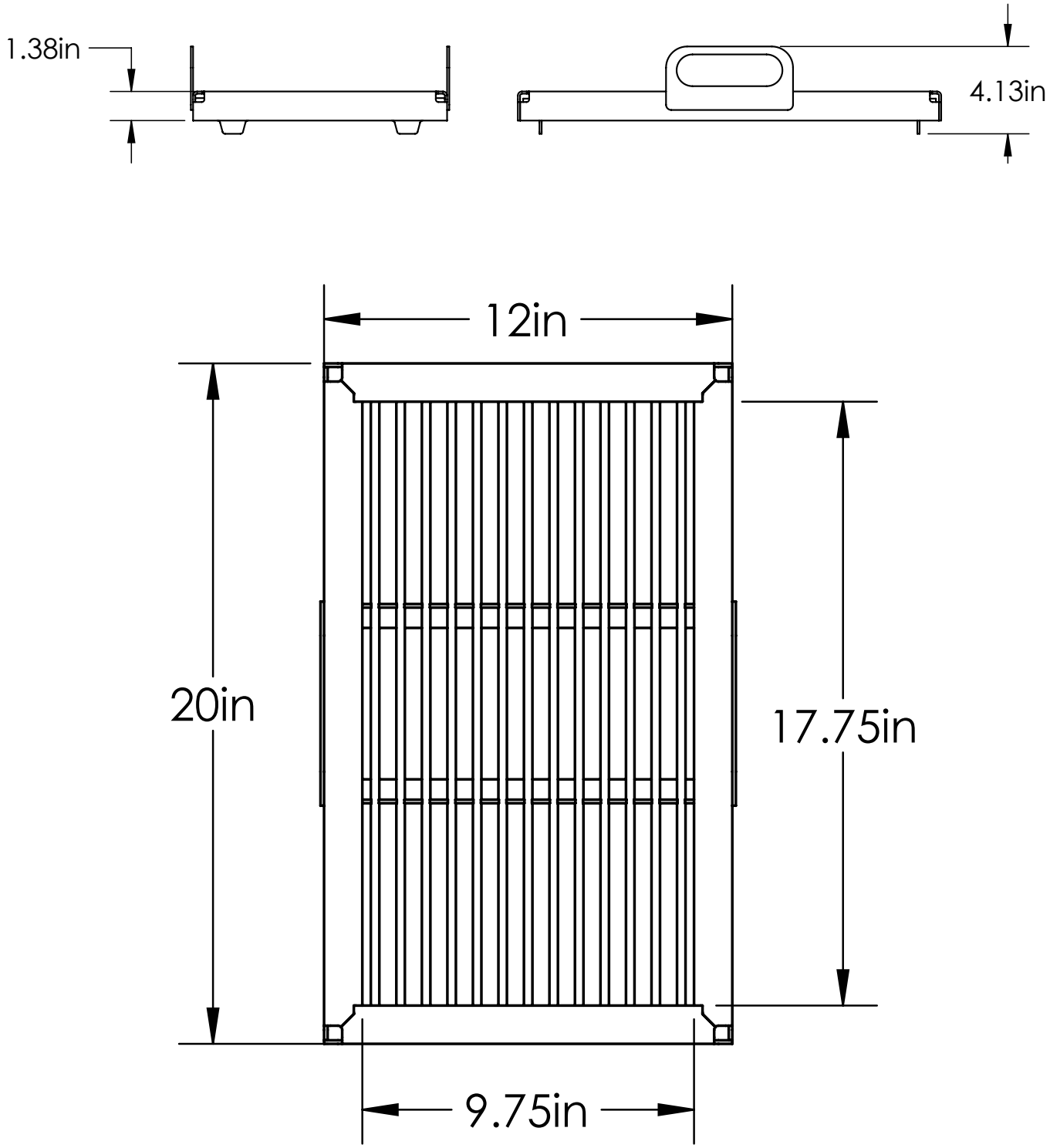
PRODUCT DIMENSIONS